MF2

SCRUBBING MACHINE
SEMI-AUTOMATIC, VERTICAL

CHEESE CARE MACHINE FOR SMALL CHEESES (MUTSCHLI, TÊTE DE MOINE)



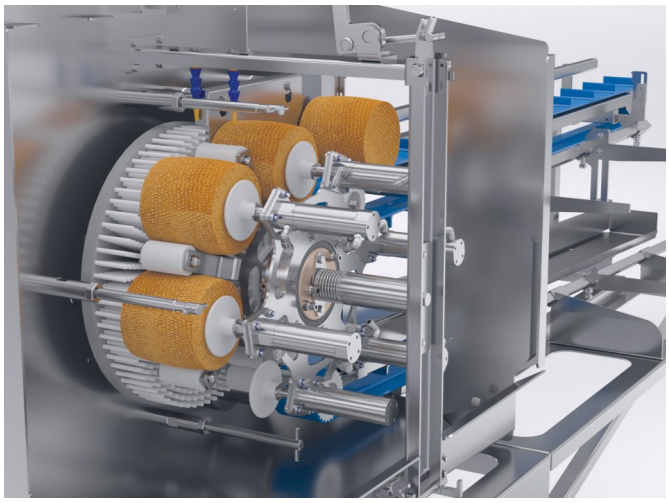

PRESENTATION

Semi-automatic, vertical cheese care machine for small cheeses. Only one operator is required for its use.

The setting of the treatment is simple and effective: Variable brush rotation speed control knob. Valves allow independent adjustment of the water flow to the side brushes and the surface brushes.

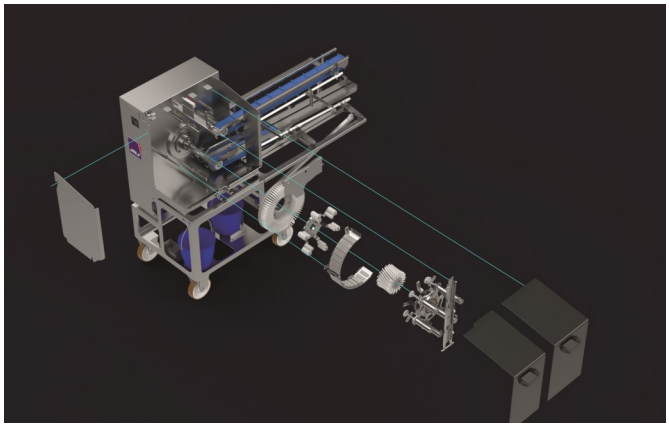

BRUSHES

The brushes perfectly fit to the shape of the cheeses. Range of brushes and qualities available as optional extras to provide appropriate care.

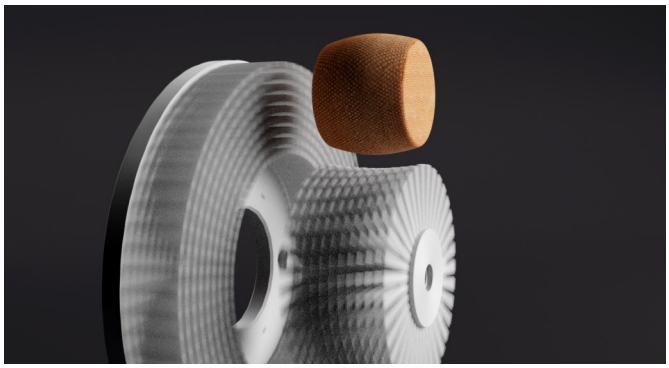

TECHNICAL INFORMATION

The values shown below are indicative only and can be adapted to the customers specific needs.

WEIGHT

Approximate masse	500 kg

ELECTRICITY

Rated voltage (tolerance ± 5%)	1x230VAC LNPE
Rated current	10 A
Assigned frequency	50 Hz
Maximum power	0.6 kW
Average consumption (approx.)	0.3 kWh
Building residual current circuit breaker FI (DDR)	30mA, type B, HI
Upstream overload cut-off	16 A/C

WORK RATE (INFORMATIVE)

Work rate machine max.	~3'600 /h
Work rate 1 person (4h)	~ 2'100 /h
Work rate 1 person (8h)	~ 1'800 /h

STANDARD EQUIPMENT

- Nylon brushes
- Three-phased plug type 15 or Euro (export: no plug)
- 20 m power cable
- Brine tank capacity and capacity of smear collection tank of 8 Liters

CONSTRUCTION

Quick and easy to clean: removable covers and brushes, no tools required

Silent, maintenance-free belt drives

Transparent doors allow work underway to be viewed and controlled

Easy to move: mounted on swivel castors

Maximum conveyor capacity: 9 cheeses

DIMENSIONS

Measures in mm

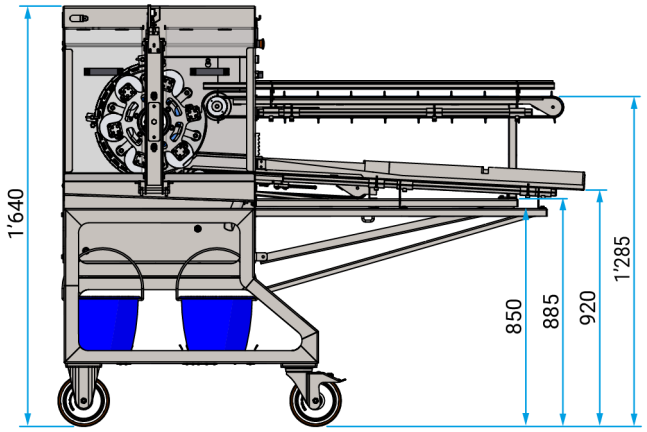

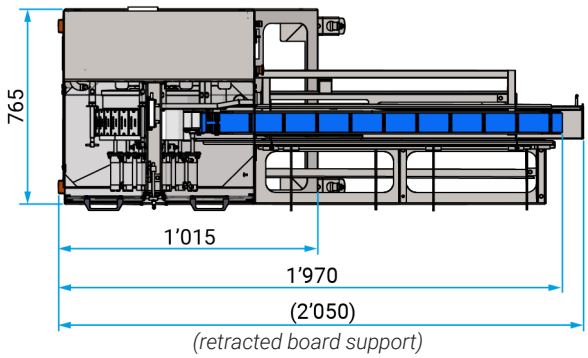

(retracted board support)

The carousel can be adapted to suit the type of cheese wheel.

CHEESE WHEEL FEATURES

in mm

Mutschli :	ø 120 - 150	h: 80 - 120
Tête de Moine :	ø 105 - 110	h: 85 - 110

Other sizes of small cheese wheels can be considered according to your needs.

OPTIONS

- Choice of top brush: Nylon 0.3 or 0.5 0.4 (on request)
- Choice of side brush: Nylon 0.3 or 0.5 0.4 (on request)

JNJ automation SA
Impasse de la Maladaire 5 | CH-1680 Romont | Tél +41 26 656 9000 | info@jnj.swiss | www.jnj.swiss

Article #042319

© JNJ automation SA. All rights reserved. The products and specifications shown in this document are subject to change at any time and without notice. Updated: 12/06/2024