RF13

FULLY AUTOMATED CHEESE TREATMENT ROBOT

FOR LARGE CHEESE-MAKING AND MATURING FACTORIES



PRESENTATION

Based on the design of our RF3 robot, which was a great success for over a decade, our new RF13 robot has evolved to meet the needs of our clients.

This new generation of robots combines ruggedness and versatility. With its numerous chassis variants, its integration is suitable for almost all existing cheese cellars.

His design has been revamped to optimise its routine maintenance and thus increase its useful life. The rugged and robust construction and many optional features are what makes our solution successful, and even beyond our borders.

A NEW GENERATION OF ROBOTS

The RF13 retains all the elements
that made the RF3 such a success.
The most significant evolutions include:

- The cheese turning system has been completely redesigned. Movements are more fluid and the stirrups grab the cheese wheels better.
- An spotlight illuminates the treatment area.
- The brine tanks are made of plastic material. Improved hygiene of the pipes, which no longer comprise welds. Increased brine volume in the compact chassis.
- Improved sealing of the chassis and brushing systems. Removal of all hollow bodies and several design optimisations to make the system more hygienic.
- New generation of PLCs with increased memory for more scalability of future functions.

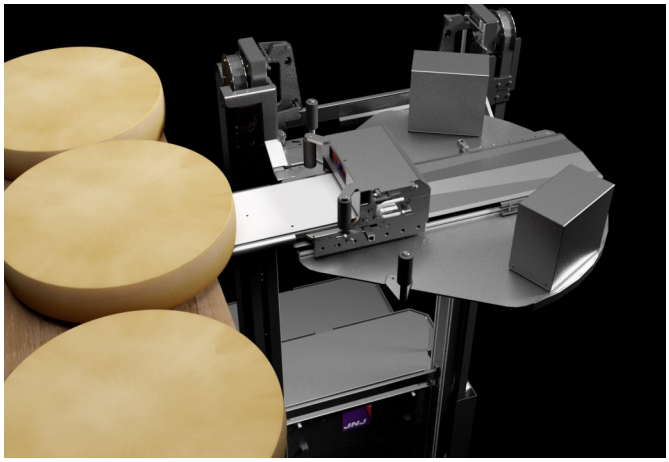

GRAB MODULE

Optimal pick-up of cheese wheels through efficient positional detection of the plate

Belt can be removed without special tools in less than one minute

Movement of all moving parts carried out using maintenance-free, non-stretch belts

Strong plastic lift and table runners, limiting wear and reducing maintenance costs

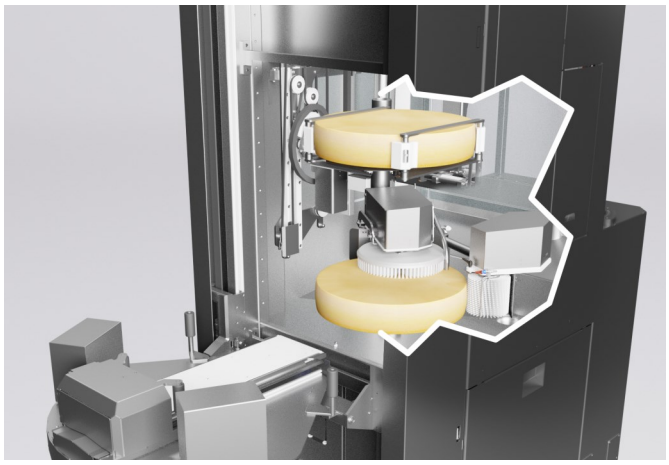

CARE

Brushes and plate can be removed without the use of special tools

Large choice of brushes available

Brine tank level detection system

A LED spotlight provides good light. It can be viewed and accessed directly from the dialogue screen

Remote brine tank selection controls for greater accessibility

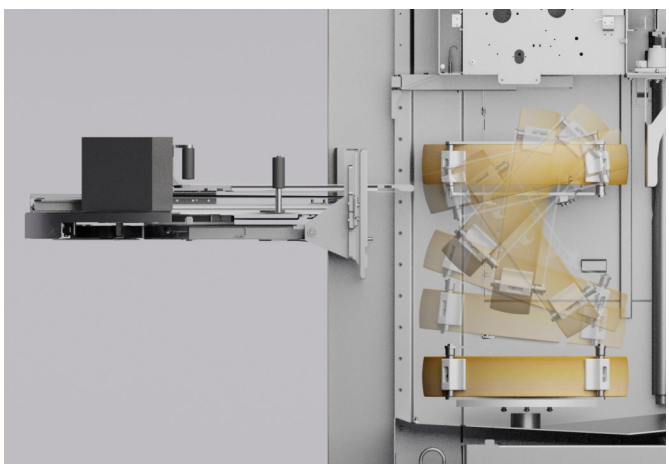

TURNING

The kinematics of the turning module have been completely redesigned. Movements are now smoother. The cheese is held better in the turner's stirrups

This new design also compacts the movement and saves space in the chassis



DIALOGUE AND CONTROL SCREEN

Easy to program, using a 12" colour screen and high-performance help system

Control system for accessing to the various settings and parameters



GUIDE AND MOVEMENT SYSTEM

Contactless guide system : the machine moves along an aisle, automatically correcting its course

The robot uses the existing infrastructure and is automatically fixed on the uprights of the shelves

The remote control allows the operator to position itself at the best viewing angle. The motorised steering and steering angle that is larger than 180° allows for accurate and effortless movement



CONSTRUCTION

Single-block chassis made entirely out of mechanically welded stainless steel 1.4301

Brine tanks and morge collection tanks made of plastic material, easily removable for cleaning

Hygienic : treatment station with smooth welding easily accessible
The sloping surface enable optimum run-off of smear liquid and rising water

Strong, rugged construction

STANDARD EQUIPEMENT

- Hard-bristled synthetic brushes
- Three-phased plug type Euro (export: no plug)

OPTIONS

- Pre– or post– treatment salting system (salting-only option also possible)
- Small wheel treatment (from 30 cm) placed one behind the other on shelves
- Rollerless working system
- Batterie movement system
- Mobile phone alarm module (SMS)
- Module of pallettizing/depallettizing front or back
- Triple mast lift to extend travel in high cellars and/or lower the height of the machine to fit through doors
- Tracking of treatments and alarms

This list of standard equipment and optional features is not exhaustive and not contractual. Only a commercial offer is binding.

TECHNICAL INFORMATION

The values shown below are indicative only and can be adapted to the customers specific needs.

WEIGHT

Approximate mass	2'100 — 2'700 kg

ELECTRICITY

Rated voltage (tolerance ± 5%)	3x400 Vac 3LNPE
Rated current	13 A
Assigned frequency	50 Hz
Maximum power	6.5 kW
Average consumption (approx.)	1.2 kWh
Building residual current circuit breaker FI (DDR)	30 mA, type B, HI
Upstream overload cut-off	16 A/C
Power cable max length	110 m

WORK RATE AND CAPACITY

Number of cheese wheels treated (approx.)	115 / hour
Brine tank capacity	220 litres
Capacity of smear collection tank	140 litres
Speed	0,3 m/s

OPERATIONAL FEATURES

Lift	Telescopic mast, double or triple rails
Number of operators	Supervisor only

PRODUCTS FEATURES

Minimum height of the first cheese wheel 200 mm

Treatable cheese wheel diameter:

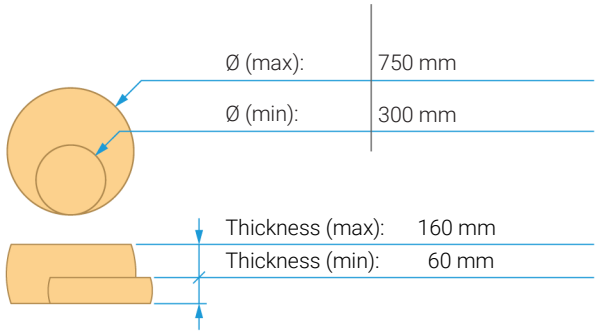

GRAB MODULE DIMENSIONS

Required clearance between top plate and ceiling

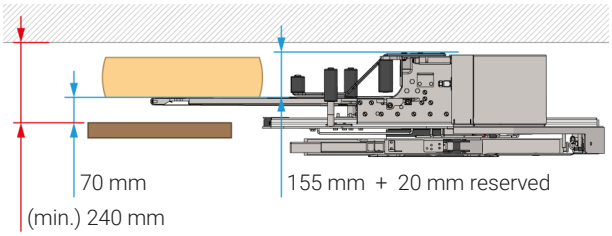

DIMENSIONS

Measures in mm

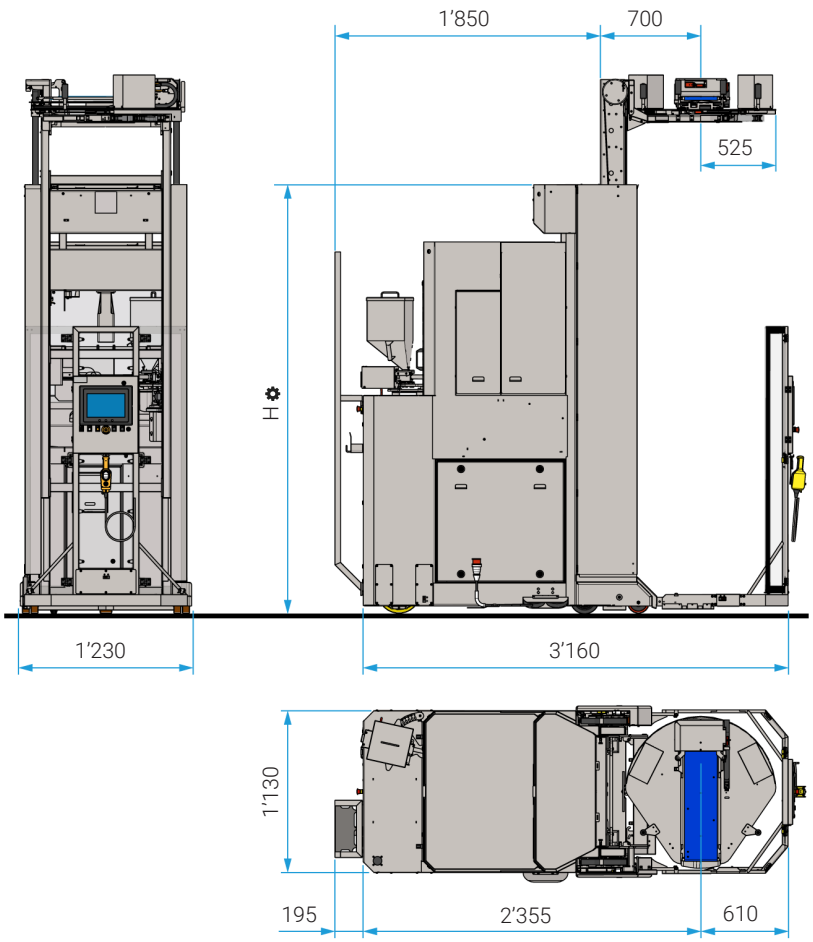

NUMBER OF TREATABLE LEVELS DEPENDING ON THE HEIGHT OF THE MACHINE (H⚙)

1st cheese height	300	300
Level centre	200	210
	↓	↓
H ⚙	Niveaux traitables	
2'600	21	20
2'800	23	22
3'000	25	24
3'200	27	26

JNJ automation SA
Impasse de la Maladaire 5 | CH-1680 Romont | Tél +41 26 656 9000 | info@jnj.swiss | www.jnj.swiss

Article #053950

© JNJ automation SA, All rights reserved. The products and specifications in this document are subject to change at any time without notice. Last update: 17 May 2022